MANTUS
ANCHORS

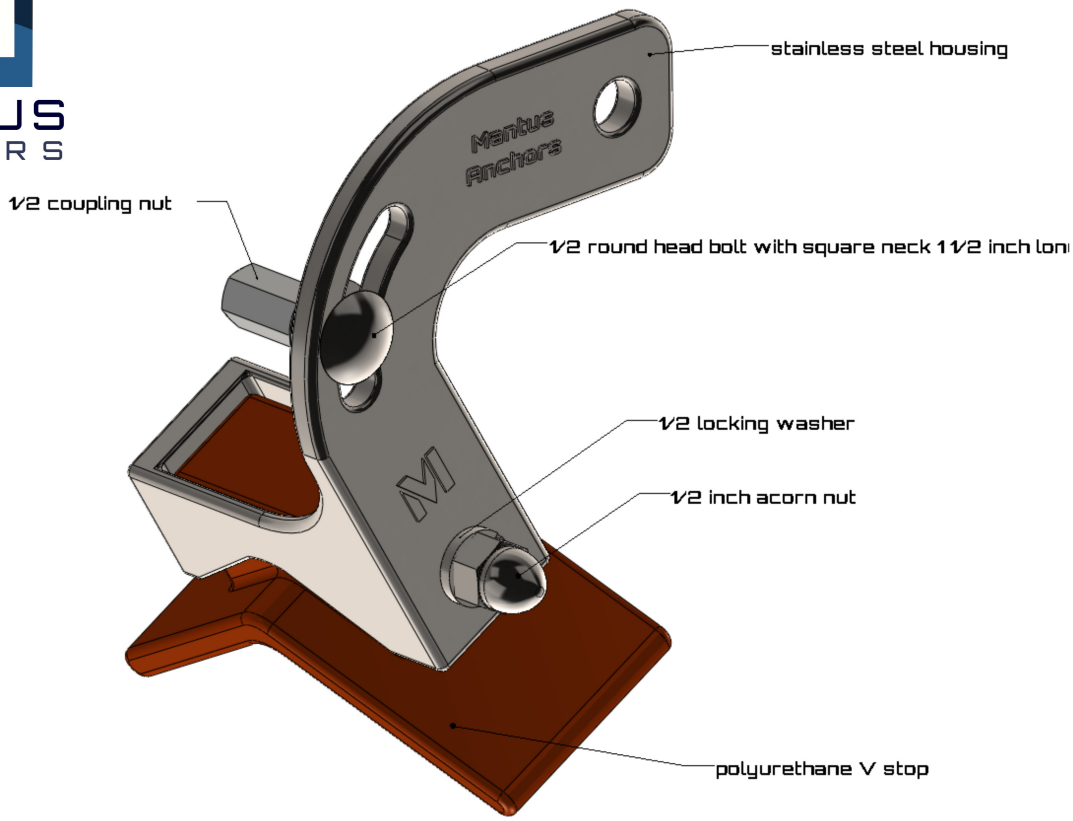

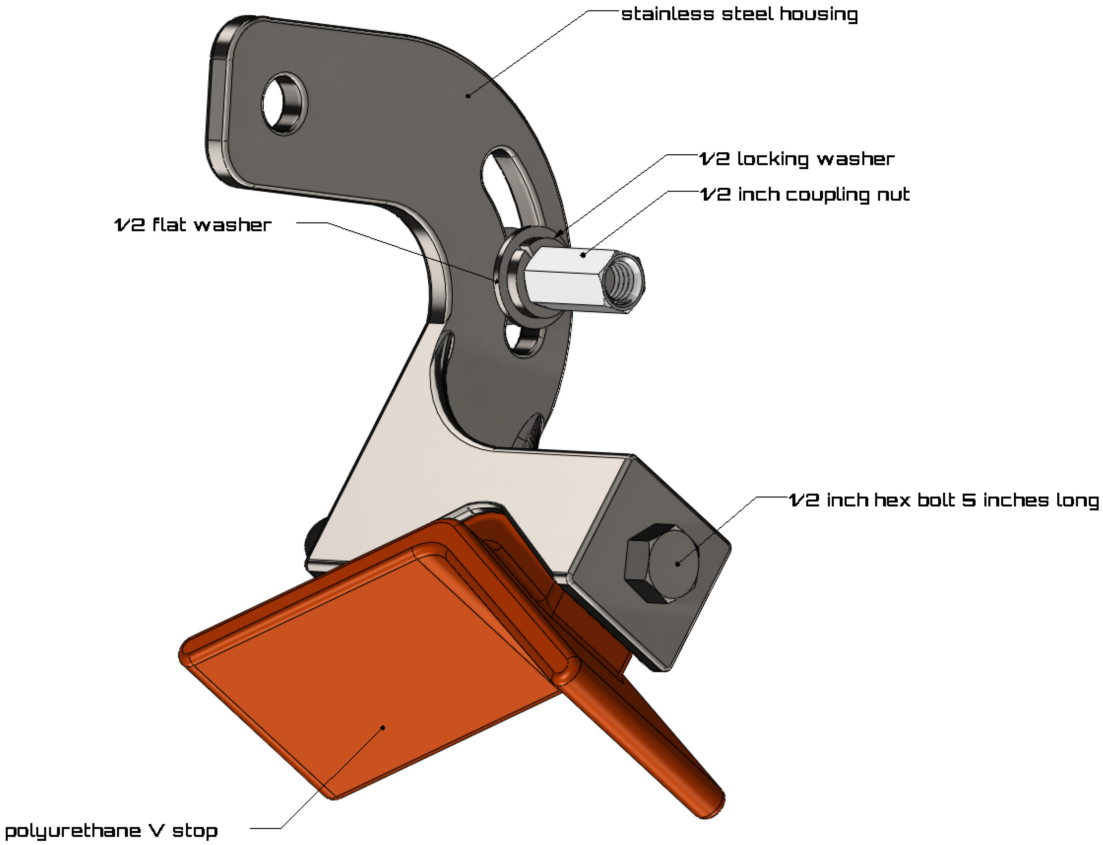
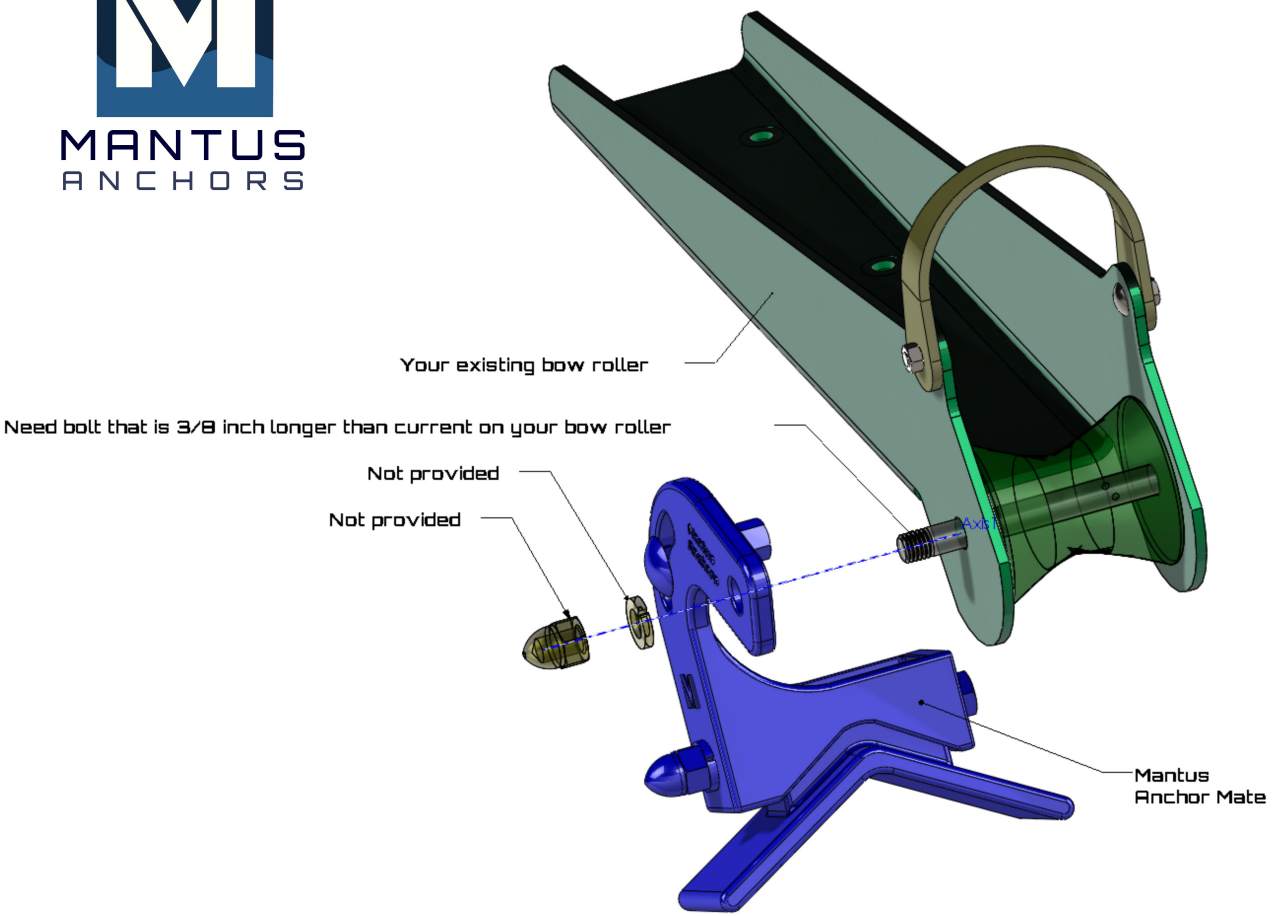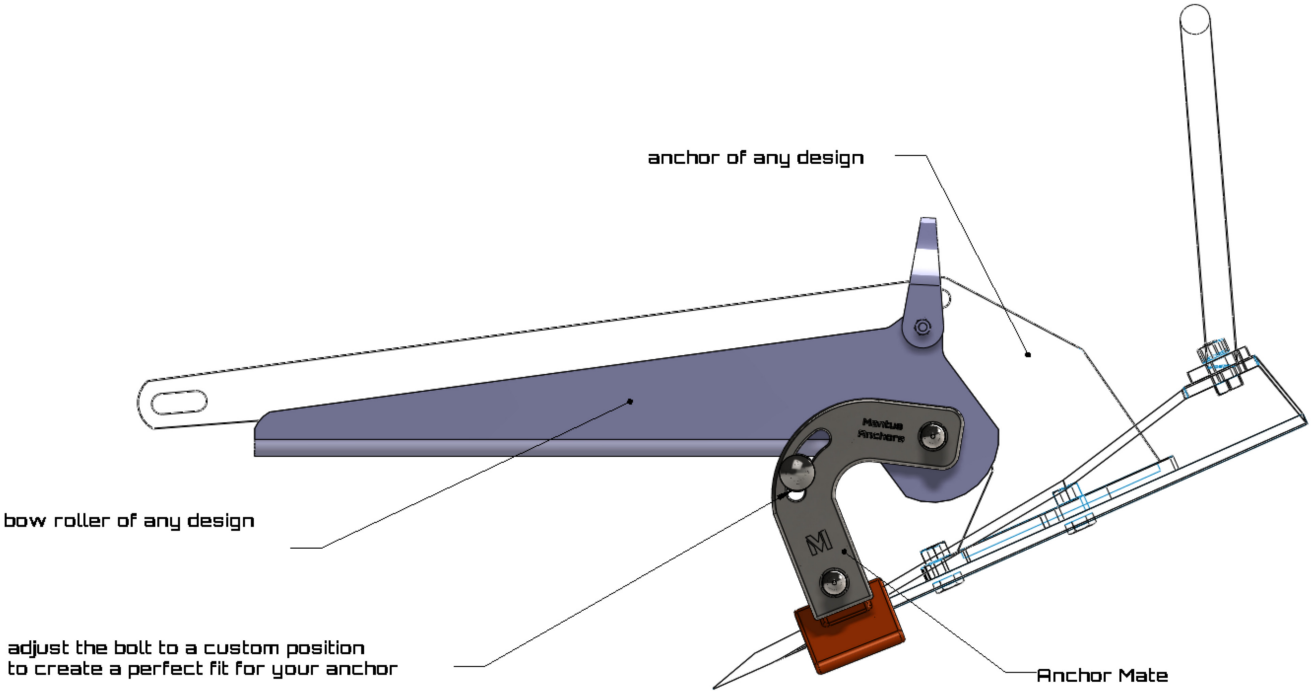
MANTUS
ANCHORS