2201097 VHM 40 ST 16 DE BP 24V
2201096 VHM 40 ST 16 DE BP 12 V

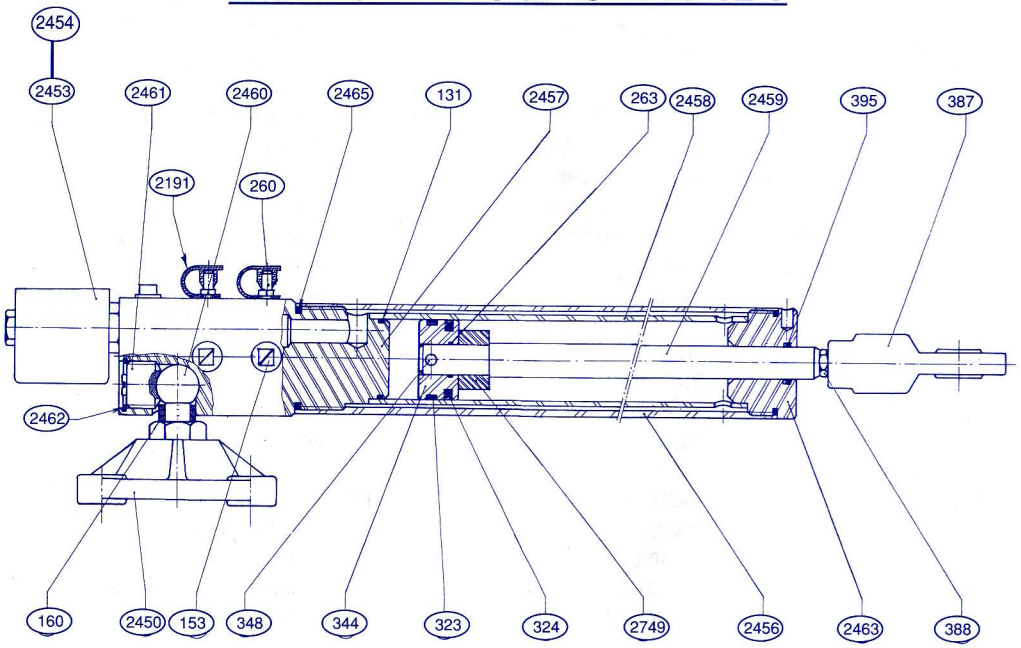

REP.	NBR	CODE	DÉSIGNATION	
131	1	1200131	JOINT OR 36X2 N-70	O-RING 36X2 N-70
153	3	1200153	BOUCHON STOCKAGE M.G 1/4	STORAGE PLUG M. G 1/4
160	2	1100160	JOINT PLAT 13X18X3 CAOUTCHOUC	RUBBER FLAT SEAL 13X18X3
260	2	1200260	PURGEUR VHM	VHM BLEEDER
263	1	1200263	JOINT OR 14X1,5 N-70	O-RING 14X1.5 N-70
323	1	1200323	BAGUE GUIDAGE LS 165T	GUIDING RING LS 165T
324	1	1200324	JOINT S 55044-0400-10N+OR 216	JOINT S 55044-0400-10N+OR 216
344	1	1200344	PISTON VHM 40 ST 16 DE BP	PISTON VHM 40 ST 16 DE BP
348	1	1200348	GOUPILLE G6 6X30 S250	PIN G6 6X30 S250
387	1	1200387	CHAPE ROTULE DIAM. 15	SWIVEL YOKE DIAM. 15
388	1	1200388	ECROU HM M14X2 A2	NUT HM M14X2 A2
395	1	1200395	JOINT LEVRES 16X20,7X3 N85	LIP SEAL 16X20.7X3 N85
2191	2	1202191	PROTECTION PURGEUR VHM	BLEEDER PROTECTION VHM
2450	1	1202450	SOCLE VHM 40 ST 16 DE BP	BASE VHM 40 ST 16 DE BP
2453	1	1202453	ELECTRO DISTRIBUTEUR TIROIR 06 F42 7/8 UNF 12 V CC	ELECTRO DISTRIBUTOR 06 F42 7/8 UNF 12 V CC
2454	1	1202454	ELECTRO-DISTRIBUTEUR TIROIR 06 F42 7/8 UNF 24 VCC	ELECTRO DISTRIBUTOR 06 F42 7/8 UNF 24 VCC
2456	1	1202456	TUBE EXT. VHM 40 ST 16 DE BP	OUTER TUBE VHM 40 ST 16 DE BP
2457	1	1202457	FOND VHM 40 ST 16 DE BP	NOSE VHM 40 ST 16 DE BP
2458	1	1202458	TUBE INT. VHM 40 ST 16 DE BP	INNER TUBE VHM 40 ST 16 DE BP
2459	1	1202459	TIGE VHM 40 ST 16 DE BP	ROD VHM 40 ST 16 DE BP
2460	1	1202460	ROTULE VHM 40 ST 16 DE BP	BALL VHM 40 ST 16 DE BP
2461	1	1202461	VIS ROTULE VHM 40 ST 16 DE BP	BALL SCREW VHM 40 ST 16 DE BP
2462	1	1202462	ANNEAU ELASTIQUE POUR ALESAGE 24X1,2XC75	FLEXIBLE RING FOR 24X1.2 BORE
2463	1	1202463	NEZ VHM 40 ST 16 DE BP	NOSE VHM 40 ST 16 DE BP
2465	2	1202465	JOINT OR 48X2 N-70	O-RING 48X2 N-70
2749	1	1202749	ENTRETOISE VHM 40 ST 16 DE BP	SPACER VHM 40 ST 16 DE BP

CODE	DÉSIGNATION SOUS-ENSEMBLE	DESIGNATION OF SUB-ASSEMBLY
1202494	POCHETTE JOINTS VHM 40 ST 16 DE BP	SEAL KIT VHM 40 ST 16 DE BP

REP.	NBR	CODE	DÉSIGNATION	
2	2	1200002	BILLE 9 ZT	BALL 9 ZT
33	2	1200033	RESSORT 5X6X10,5	SPRING 5X6X10.5
47	1	3900047	MOT. 110 W. 24 VCC 1800TR. B 14F.T 59 IP 20 S1	MOTOR 110 W. 24 VCC1800 TR B 14F.T 59 IP 20 S1
54	2	1200054	BILLE 4 ZT	BALL 4 ZT
55	1	3900055	MOT. 110 W. 12 VCC 1800TR. B 14F.T 59 IP 20 S1	MOTOR 110 W. 12 VCC1800 TR B 14F.T 59 IP 20 S1
139	2	1200139	JOINT PLAT G 3/8 A	FLAT SEAL G 3/8 A
153	3	1200153	BOUCHON STOCKAGE M.G 1/4	STORAGE PLUG M. G 1/4
260	1	1200260	PURGEUR VHM	VHM BLEEDER
274	1	2200274	BOUCHON CLAPET G 1/4	VALVE PLUG G 1/4
608	3	1100608	JOINT PLAT6X10X1 FIBRE	FLAT SEAL 6X10X1 FIBER
703	1	1200703	JOINT OR 56,87X1,78 N-70	O-RING 56.87X1.78 N-70
712	3	1200712	VIS CHC M6X45 A2	SCREW CHC M6X45 A2
713	1	1200713	PATTE RV2	LUG RV2
714	1	1200714	BARILLET RV2	BARREL RV2
715	1	1200715	CORPS RV2	BODY RV2
758	1	1200758	CENTREUR RV2	CENTER PUNCH RV2
759	2	1200759	AXE ARTICULATION RV2	HINGE PIN RV2
760	1	1200760	CARTER RV2	HOUSING RV2
916	1	1200916	ECROU HM M8 A2	NUT HM M8 A2
953	1	1200953	VIS REGLAGE DEBIT RV2	ADJUSTING SCREW RV2
969	1	1200969	ARBRE RV2	SHAFT RV2
970	1	1200970	GOUPILLE ELASTIQUE SPIRALE 4X16 MBK	SPIRAL SPRING PIN 4X16 MBK
972	1	1200972	BASCULEUR RV2	TIPPER PLATE RV2
973	1	1200973	ADAPTEUR RV2	ADAPTER RV2
984	2	1200984	VIS CHC M6X16X A2	SCREW CHC M6X16XA2
1006	1	1501006	BUTEE BILLES 51200	THRUST BALL BEARING 51200
1008	6	1501008	PISTON 66	PISTON 66
1016	1	1501016	ROULEMENT 6001	BALL BEARING 6001
1024	6	1501024	RESSORT PISTON 66	PISTON SPRING 66
1027	2	1501027	RESSORT 3,8X4,8X18,5	SPRING 3.8X4.8X18.5
1028	2	1501028	BILLE 5 ZT	BALL 5 ZT
1034	2	1501034	ANNEAU ELASTIQUE POUR ALESAGE 28X1,2	FLEXIBLE RING FOR 28X1.2 BORE
2009	2	1202009	VIS CLAPET SURPRESSION RV2	SCREW FOR PRESSURE RELIEF VALVE RV2
2113	2	1202113	VIS CLAPET ASPIRATION RV2	SCREW FOR SUCTION VALVE RV2
2151	2	1202151	SIEGE CAR RV2	LOCK VALVE SEAT RV2
2152	2	1202152	BUTEE RV2	STOP RV2
2167	4	1202167	VIS H M5X16 8.8	SCREW H M5X16 8.8
2168	2	1202168	ANNEAU ELASTIQUE POUR ALESAGE 12X1	FLEXIBLE RING FOR 12X1 BORE
2169	2	1202169	RESSORT 3X4,6X20	SPRING 3X4.6X20
2191	1	1202191	PROTECTION PURGEUR VHM	BLEEDER PROTECTION VHM
2239	1	1202239	MAMELON 2XG1/4 M-LAITON-N	NIPPLE 2XG1/4 M BRASS N
2375	1	1202375	JOINT LEVRES RENF. 12X28X7 N85	LIP SEAL REINF. 2X28X7 N85
2469	1	1202469	TIROIR RV2-ST	SLIDE RV2-ST
2484	1	1202484	JOINT OR 7 N-70	O-RING 7 N-70
2585	1	1202585	RESERVE RV2-ST	RESERVE RV2-ST

CODE	DÉSIGNATION SOUS-ENSEMBLE	DESIGNATION OF SUB-ASSEMBLY
1200656	POCHETTE JOINTS RV2	SEAL KIT RV2
1200904	PLATINE + JEU CHARBONS DOG. 168-4109	SUPPORT+ SET OF CARBON BRUSHES DOG. 168-4109